HOOD EXHAUST RATINGS:
7.92 SQ FT OPENING AT FULL OPEN @ 100 LFM, 792 CFM
4.75 SQ FT OPENING AT 18" OPEN @ 100 LFM, 475 CFM
.33 STATIC PRESSURE AT FUME HOOD DUCT COLLAR

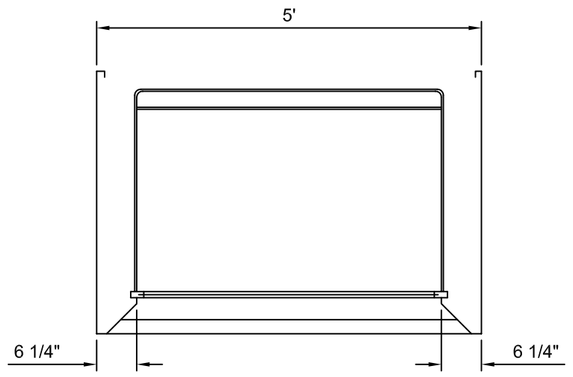

HORIZONTAL SECTION

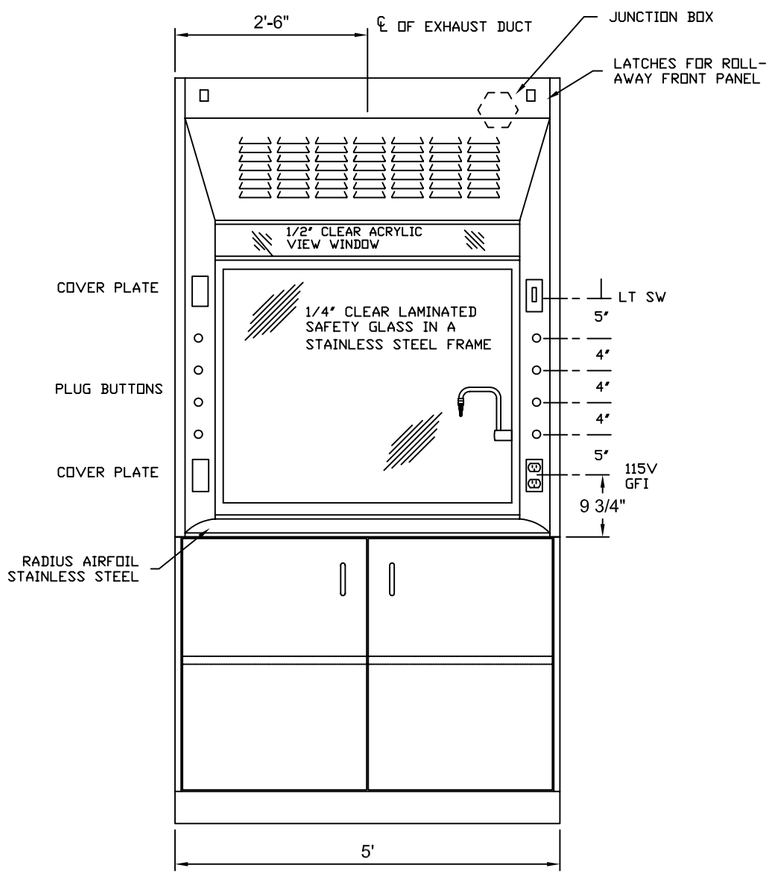

FRONT ELEVATION

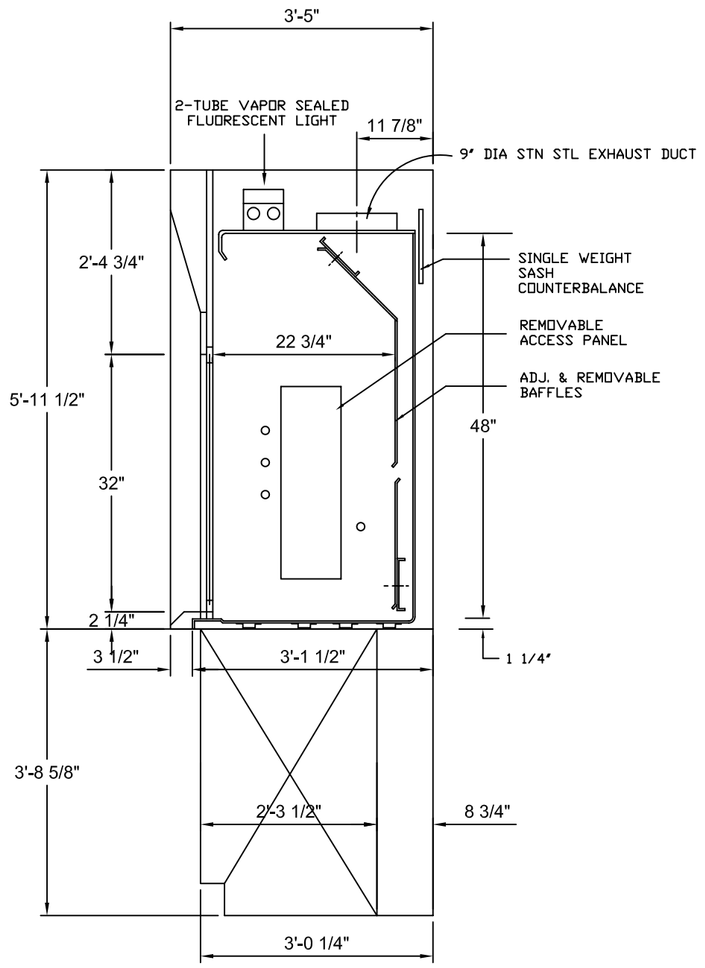

VERTICAL SECTION

QTY ONE- RADIOISOTOPE FUME HOOD REQ'D AS SHOWN

LONGO inc.
100 HILLTOP ROAD
RAMSEY, NJ 07446
PHONE: 201.825.1500
FAX: 201.825.4784
WWW.LONGOLABS.COM

SHEET DESCRIPTION: DETAIL
DATE: 2005.8.4
REVISED:
PROJECT #: 00000
SCALE: 1/2" = 1'-0"
DRAWN BY: SEAN ONDICH
SONDICH@LONGOINC.COM
CHECKED BY: ANTHONY STELLATOS
ANTHONYS@LONGOINC.COM
SHEET #: D-004